GIOVENZANA
INTERNATIONAL B.V.

Strawinskylaan 1105
1077 XX Amsterdam, The Netherlands

EN
datasheet

FESTOON SYSTEM 41 EX

EXPLOSION PROOF EQUIPMENT

TROLLEY ENERGY TRANSMISSION SYSTEM

- Bar height: 41 mm
- Load capacity: 140 kg/m
- Galvanized steel
- Suitable for flat and round cables

INSTRUCTION MANUAL

	30602001/4 C-rail bar (4 m)	p.3
	30602002 Joint unit	p.3
	30602034 Double joint unit	p.4
	30602003 Wall fixing bracket	p.4
	30602004 Ceiling fixing bracket	p.5
	30602038EX Line end stop	p.5
	30602091EX Towing trolley for flat cable (saddle: 68 mm)	p.6
	30602086EX Trolley for flat cable (saddle: 68 mm)	p.6
	30602044EX Swinging trolley for round cable (Ø 10...25 mm)	p.7
	30602045EX Swinging trolley for round cable (Ø 26...40 mm)	p.7
	30602071EX Head clamp (saddle: 55 mm)	p.8
	30602072EX Head clamp (saddle: 76 mm)	p.8
	30602020EX Trolley without plug / socket (saddle: 68 mm)	p.9

Dimensions in mm / illustrations NOT in scale

Giovenzana International B.V. reserves the right to change the features and data shown in this document at any time and without notice.
This document cannot therefore be considered a contract with third parties.

EQUIPMENT CLASSIFICATION IN ACCORDANCE WITH UTILIZATION ZONES

ATEX	2014/34/EU European Directive								
	CE	Ex	**II**	**2G**	**Ex h**	**IIB**	**T5**	**Gb**	All the models of the series are verified to be in compliance with the follows: apparatus Category 2 G, suitable for installation hazardous areas: Zone 1 and 2 **(gas)** according to EN/IEC 60079-10-1.
	CE	Ex	**II**	**2D**	**Ex h**	**IIIC**	**T85°C**	**Db**	All the models of the series are verified to be in compliance with the follows: apparatus Category 2 D, suitable for installation hazardous areas: Zone 21 and 22 **(dust)** according to EN/IEC 60079-10-2.
IECEx	EN ISO 80079-36								
	Ex h	**IIB**	**T5**	**Gb**				**Gas**	
	Ex h	**IIIC**	**T85°C**	**Db**				**Dust**	
EAC Ex	TR TS 012/2011 GOST 31441.1 (EN 13463-1) GOST 31441.5 (EN 13463-5)					TP TC 012/2011 ГОСТ 31441.1 (EN 13463-1) ГОСТ 31441.5 (EN 13463-5)			
	See IECEx scheme reference								

C-RAIL BAR (4 m)

30602001/4

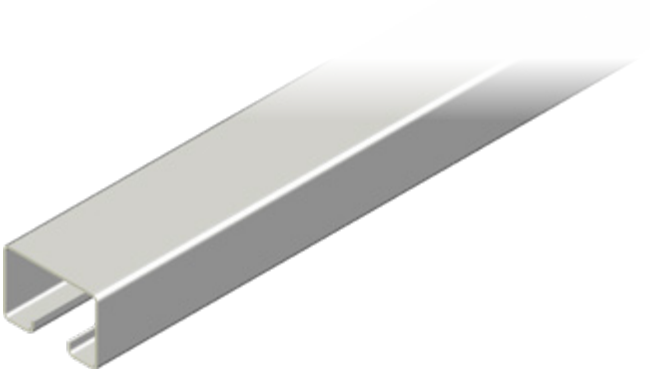

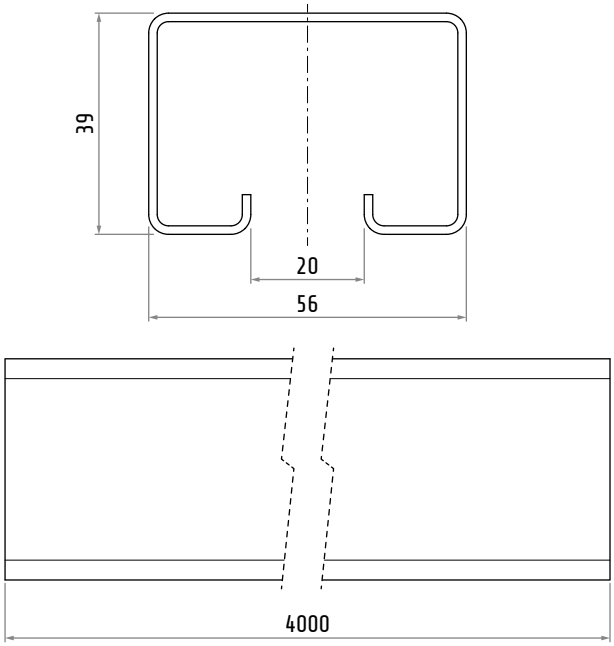

Material	galvanized steel
Weight	~2.0 kg/m

JOINT UNIT

30602002

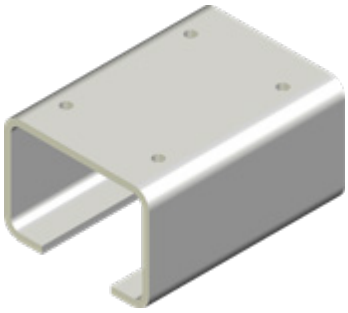

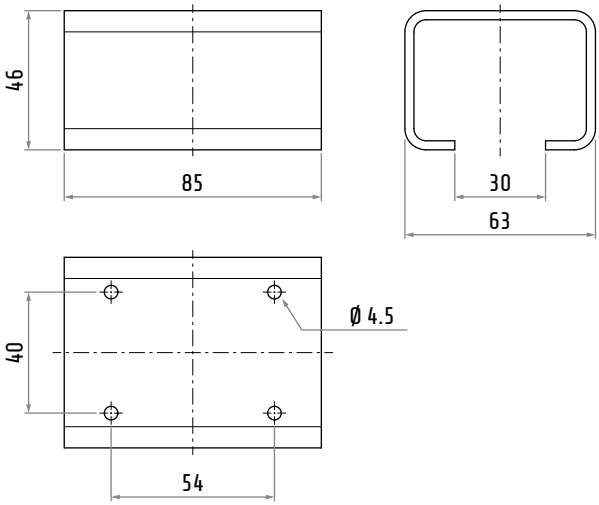

Material	galvanized steel
Weight	~335 g

DOUBLE JOINT UNIT

30602034

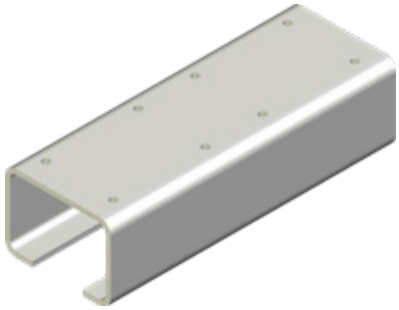

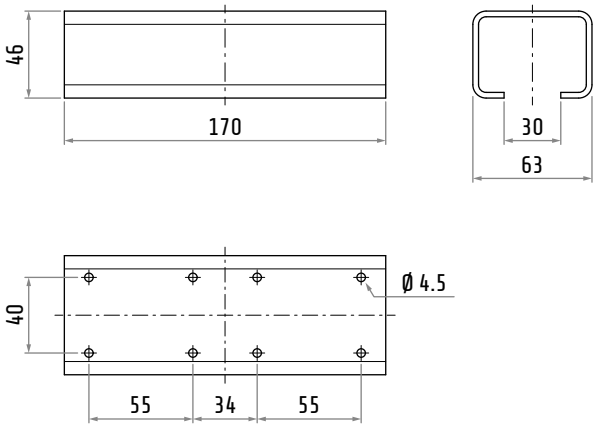

Material	galvanized steel
Weight	~680 g

WALL FIXING BRACKET

30602003

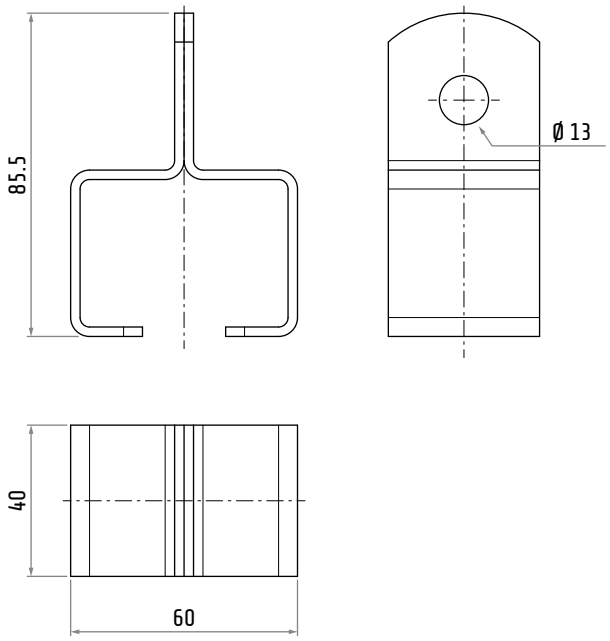

Material	galvanized steel
Weight	~180 g

CEILING FIXING BRACKET

30602004

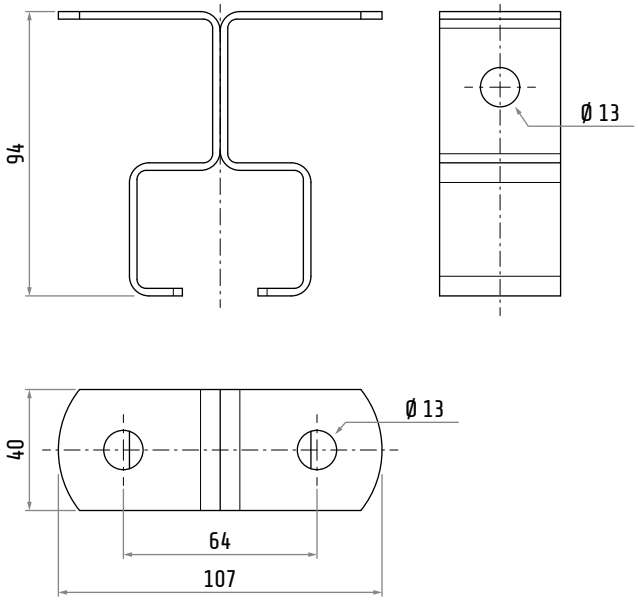

Material	galvanized steel
Weight	~260 g

LINE END STOP

30602038EX

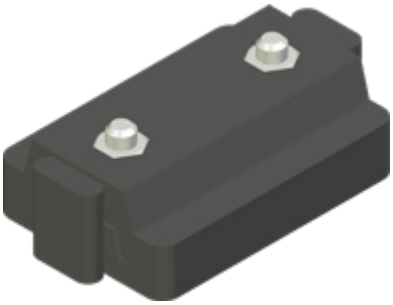

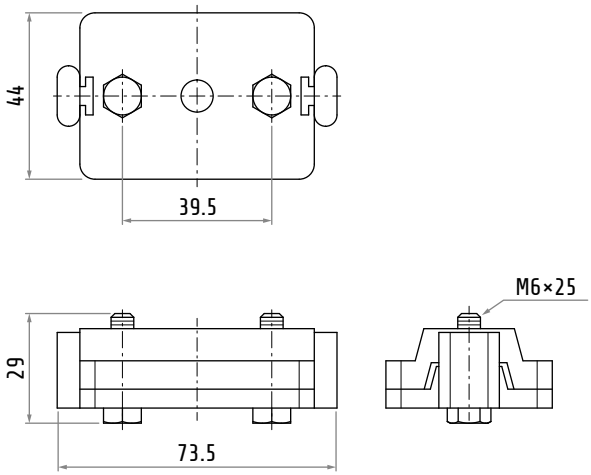

Material	body nuts and bolts	thermoplastic galvanized steel
Weight		~65 g

TOWING TROLLEY FOR FLAT CABLE (SADDLE: 68 mm)

30602091EX

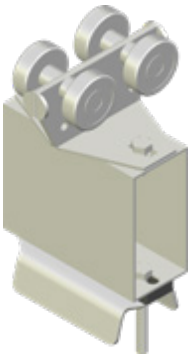

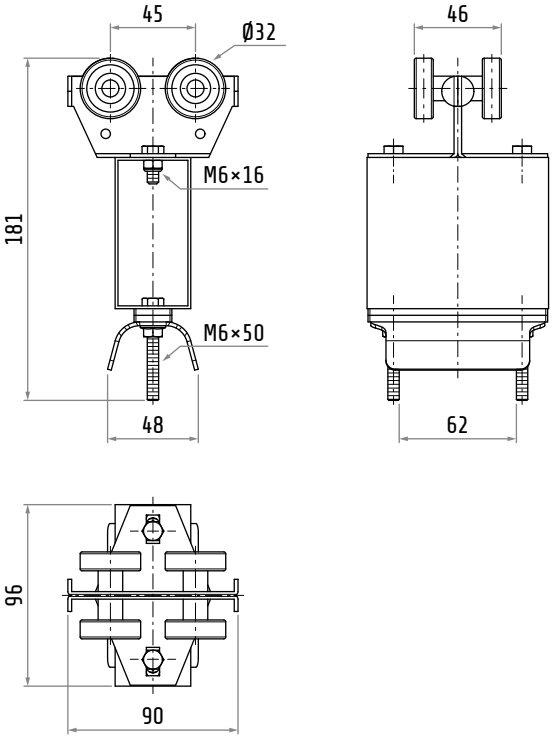

Material	galvanized steel and thermoplastic
Weight	~840 g

TROLLEY FOR FLAT CABLE (SADDLE: 68 mm)

30602086EX

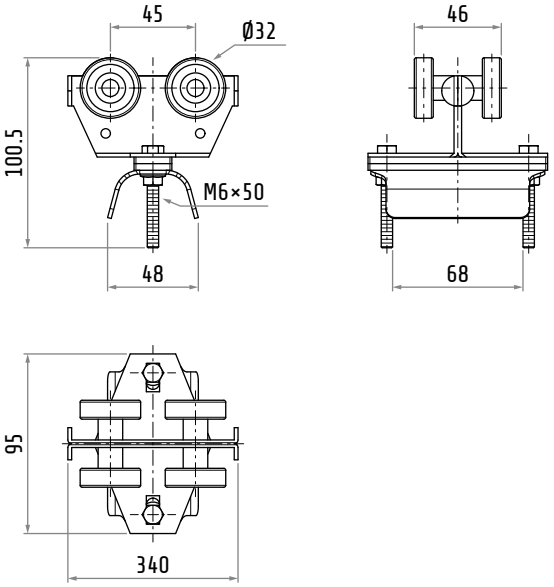

Material	galvanized steel and thermoplastic
Weight	~560 g

SWINGING TROLLEY FOR ROUND CABLE (Ø 10...25 mm)

30602044EX

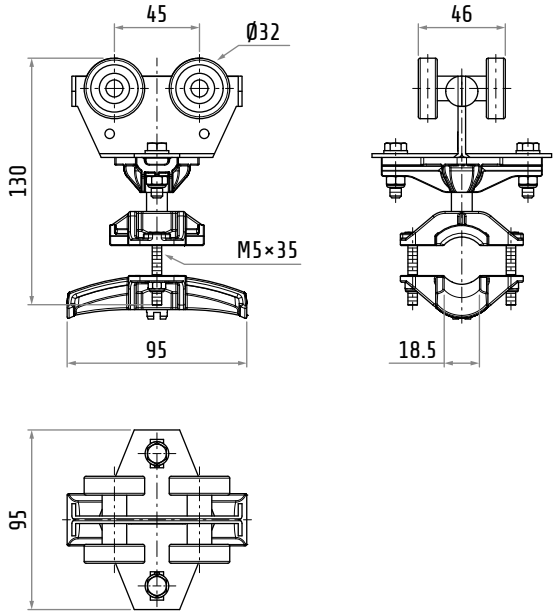

Material	galvanized steel and thermoplastic
Weight	~570 g

SWINGING TROLLEY FOR ROUND CABLE (Ø 26...40 mm)

30602045EX

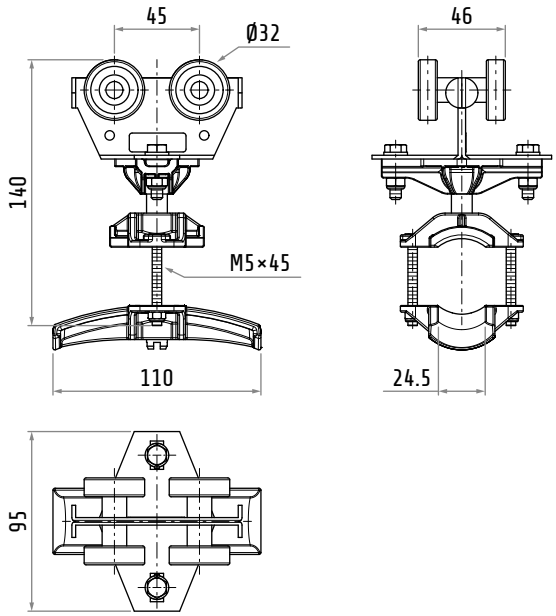

Material	galvanized steel and thermoplastic
Weight	~575 g

HEAD CLAMP (SADDLE: 55 mm)

30602071EX

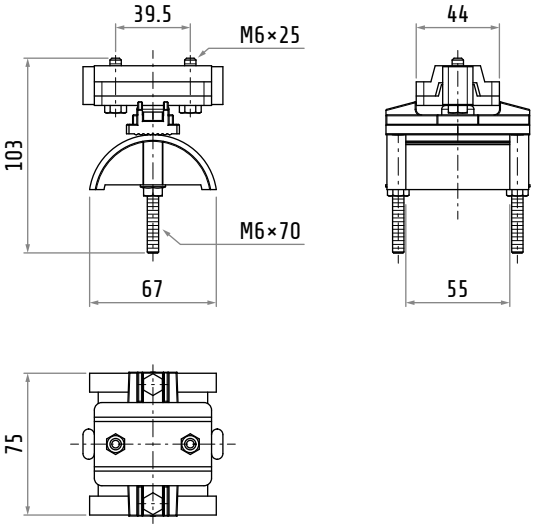

Material	body nuts and bolts	thermoplastic galvanized steel
Weight		~165 g

HEAD CLAMP (SADDLE: 76 mm)

30602072EX

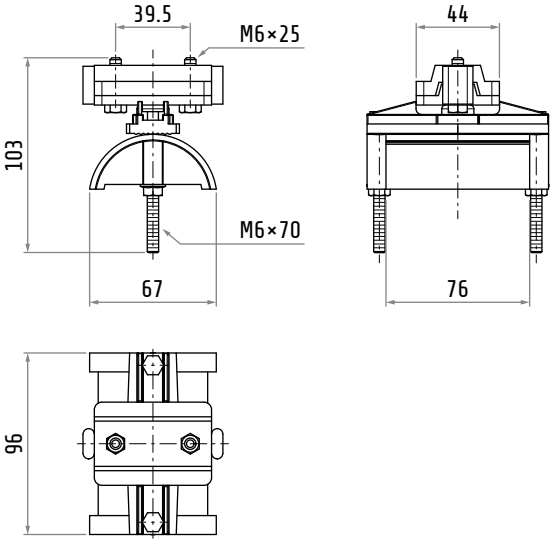

Material	body nuts and bolts	thermoplastic galvanized steel
Weight		~195 g

TROLLEY WITHOUT PLUG / SOCKET (SADDLE: 68 mm)

30602020EX

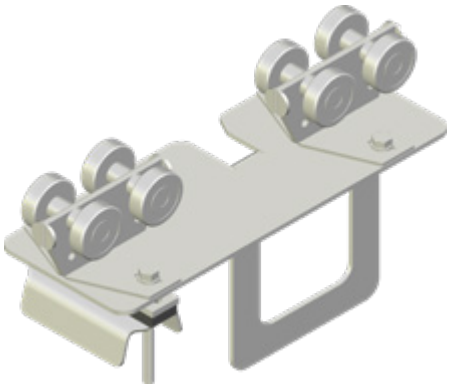
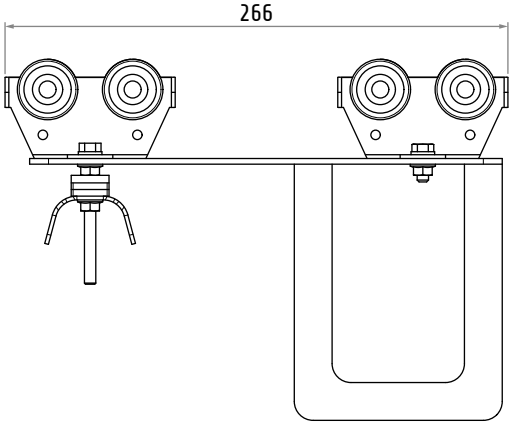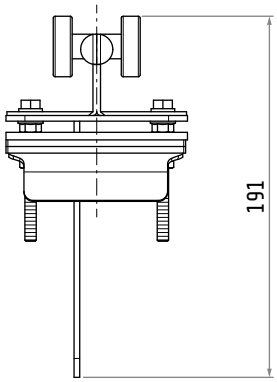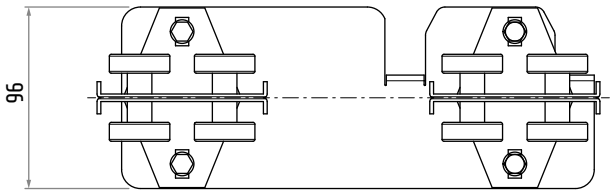
Material	galvanized steel and thermoplastic
Weight	~1.8 kg